SAMSUNG CONFIDENTIAL
THIS DOCUMENT CONTAINS CONFIDENTIAL
PROPRIETARY INFORMATION THAT IS
SAMSUNG ELECTRONICS CO'S PROPERTY.
DO NOT DISCLOSE TO OR DUPLICATE FOR OTHERS
EXCEPT AS AUTHORIZED BY SAMSUNG.

SM-A135M

2021.12.28.

sheet01 : GSM / WCDMA / LTE RF
sheet02 : TRANCEIVER, DRX
sheet03 : SENSORS, NFC, CONNECTIVITY
sheet04 : NACHO
sheet05 : PMIC, CHARGER, KEY, MOTOR, eMCP, SD/SIM
sheet06 : AUDIO, DISPLAY, SUB FPCB CON
sheet07 : CAMERA

SAMSUNG CONFIDENTIAL
THIS DOCUMENT CONTAINS CONFIDENTIAL PROPRIETARY INFORMATION THAT IS SAMSUNG ELECTRONICS CO'S PROPERTY. DO NOT DISCLOSE TO OR DUPLICATE FOR OTHERS EXCEPT AS AUTHORIZED BY SAMSUNG.

	CIS/EUR/MEA/SEA/SWA/CHN	LA
FDD	1/ 3/ 5/ 7/ 8/ 20/ 28	1/ 2/ 3/ 4/ 5/ 7/ 8/ 12/ 13/ 17/ 26/ 28/ 66
TDD	38/ 40/ 41	38/ 40/ 41
3G	1/ 5/ 8	1/ 2/ 4/ 5/ 8
2G	850/ 900/ 1800/ 1900	850/ 900/ 1800/ 1900

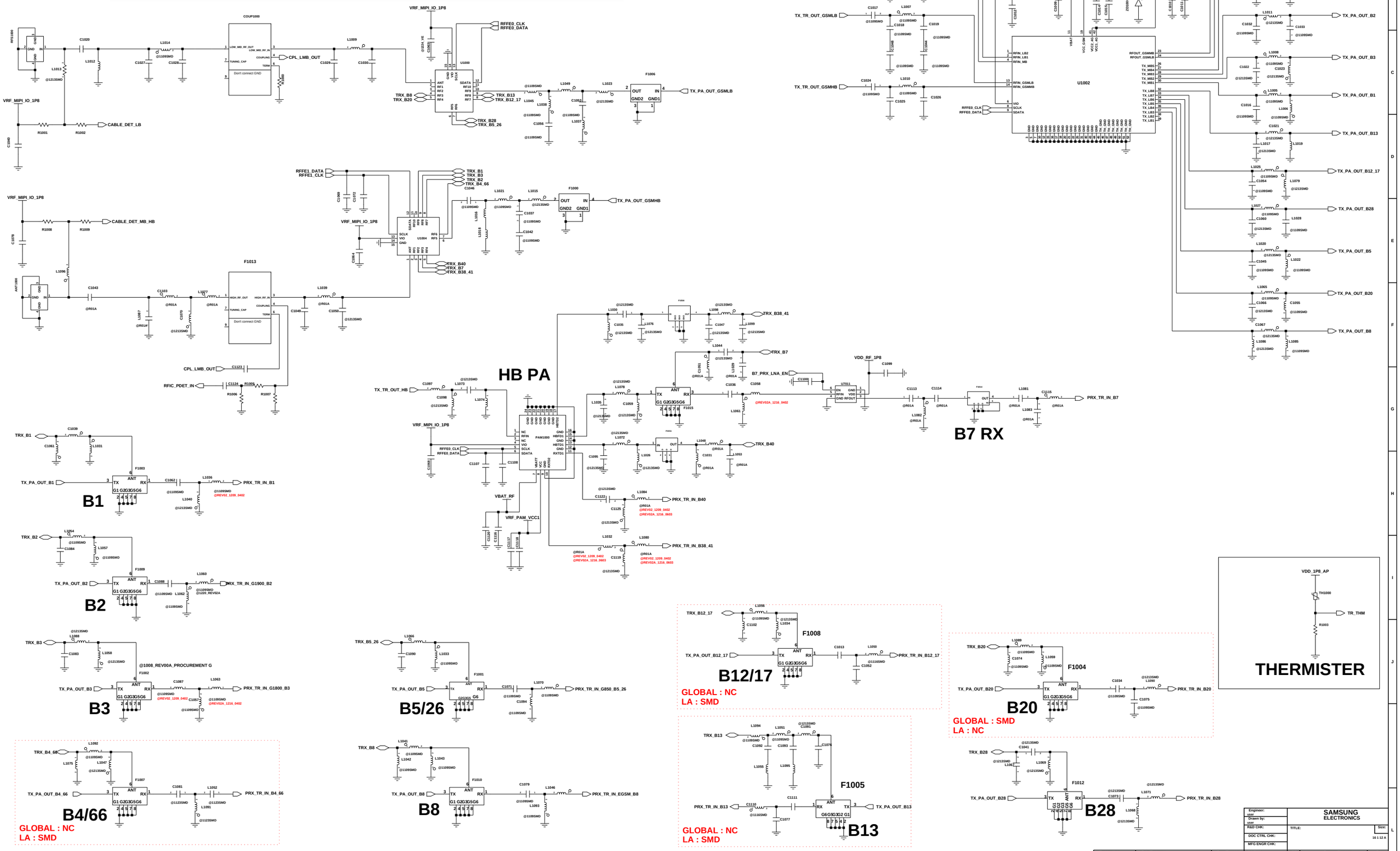

Engineer: user	SAMSUNG ELECTRONICS	
Drawn by: user		
R&D CHK:	TITLE:	Size: 16 1 12 A
DOC CTRL CHK:		
MFG ENGR CHK:		
QA CHK:	REV	Drawing Number:
Changed by: user	Date Changed: Monday, April 23, 2018	Time Changed: 8:49:04 pm
		Page: 1

SAMSUNG CONFIDENTIAL
THIS DOCUMENT CONTAINS CONFIDENTIAL PROPRIETARY INFORMATION THAT IS SAMSUNG ELECTRONICS CO'S PROPERTY. DO NOT DISCLOSE TO OR DUPLICATE FOR OTHERS EXCEPT AS AUTHORIZED BY SAMSUNG.

DRX

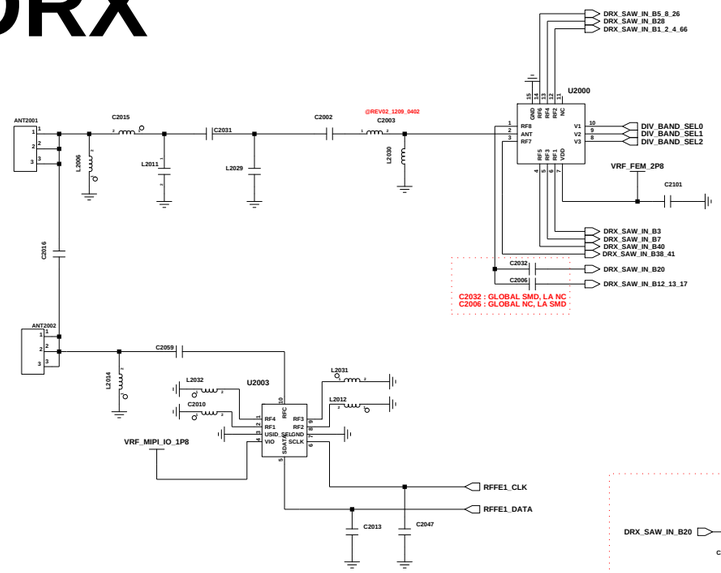

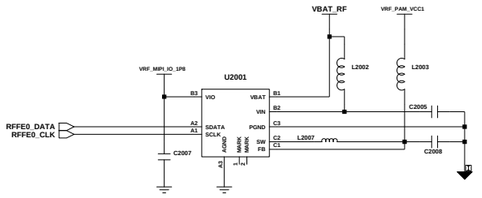

APT MODULATOR

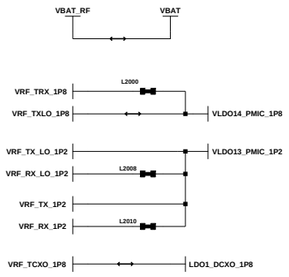

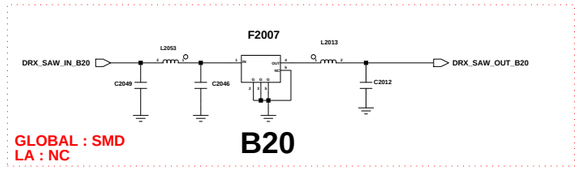

B20

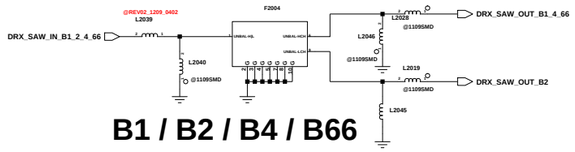

B1 / B2 / B4 / B66

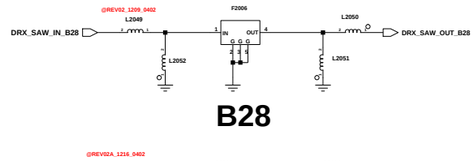

B28

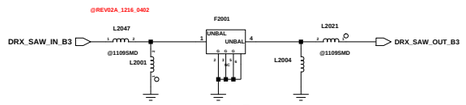

B3

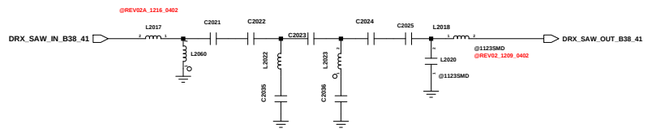

B38 / B41

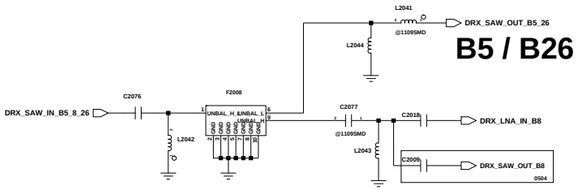

B5 / B26

B5/ B8 / B26

B8

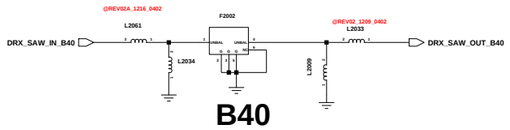

B40

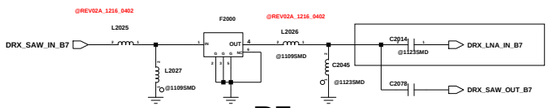

B7

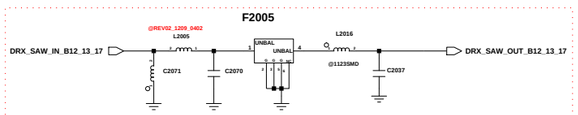

B12 / B13 / B17

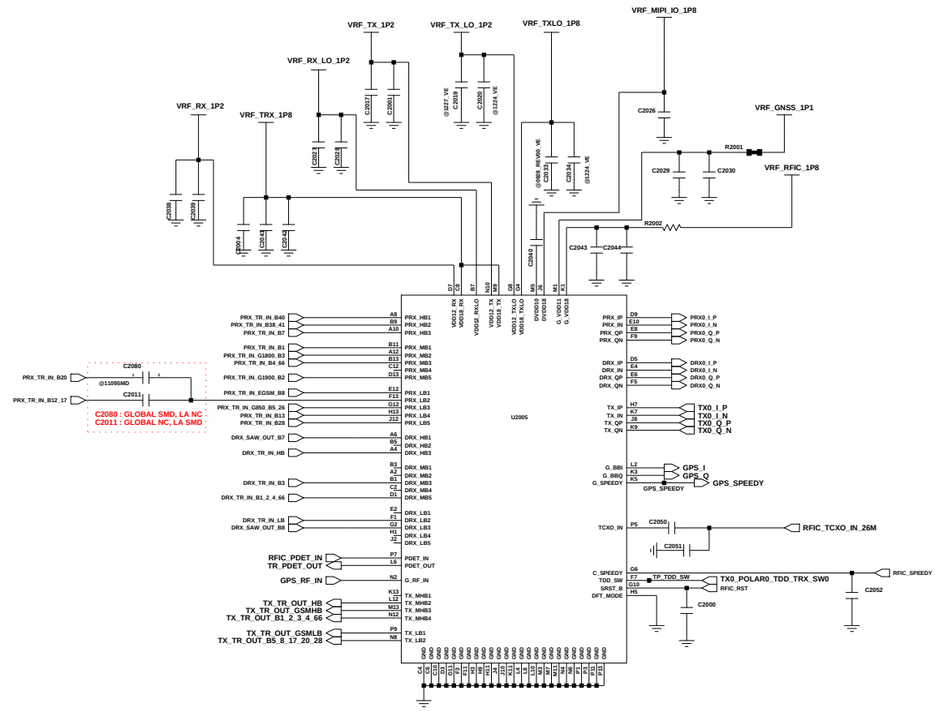

TRANSCEIVER

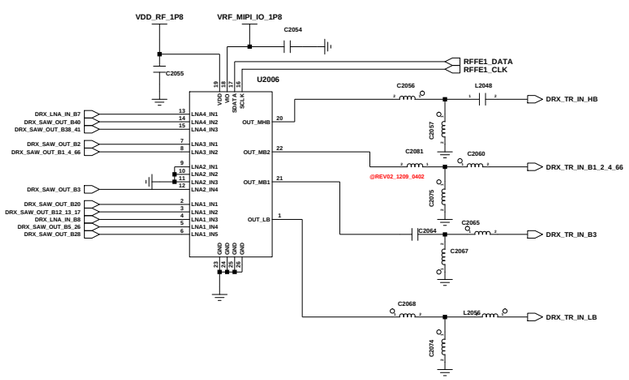

DRX LNA BANK

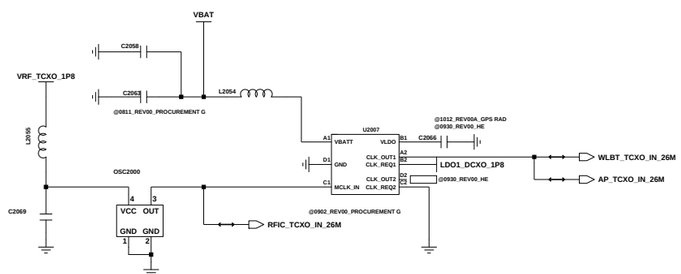

26MHz TCXO

Engineer	
Drawn by:	
R&D CHK:	TITLE:
DOC CTRL CHK:	
MFG ENGR CHK:	

Changed by:	Date Changed:	Time Changed:	QA CHK:	Drawing Number	2/7

SAMSUNG CONFIDENTIAL
THIS DOCUMENT CONTAINS CONFIDENTIAL
PROPRIETARY INFORMATION THAT IS
SAMSUNG ELECTRONICS CO'S PROPERTY.
DO NOT DISCLOSE TO OR DUPLICATE FOR OTHERS
EXCEPT AS AUTHORIZED BY SAMSUNG.

BT/WIFI

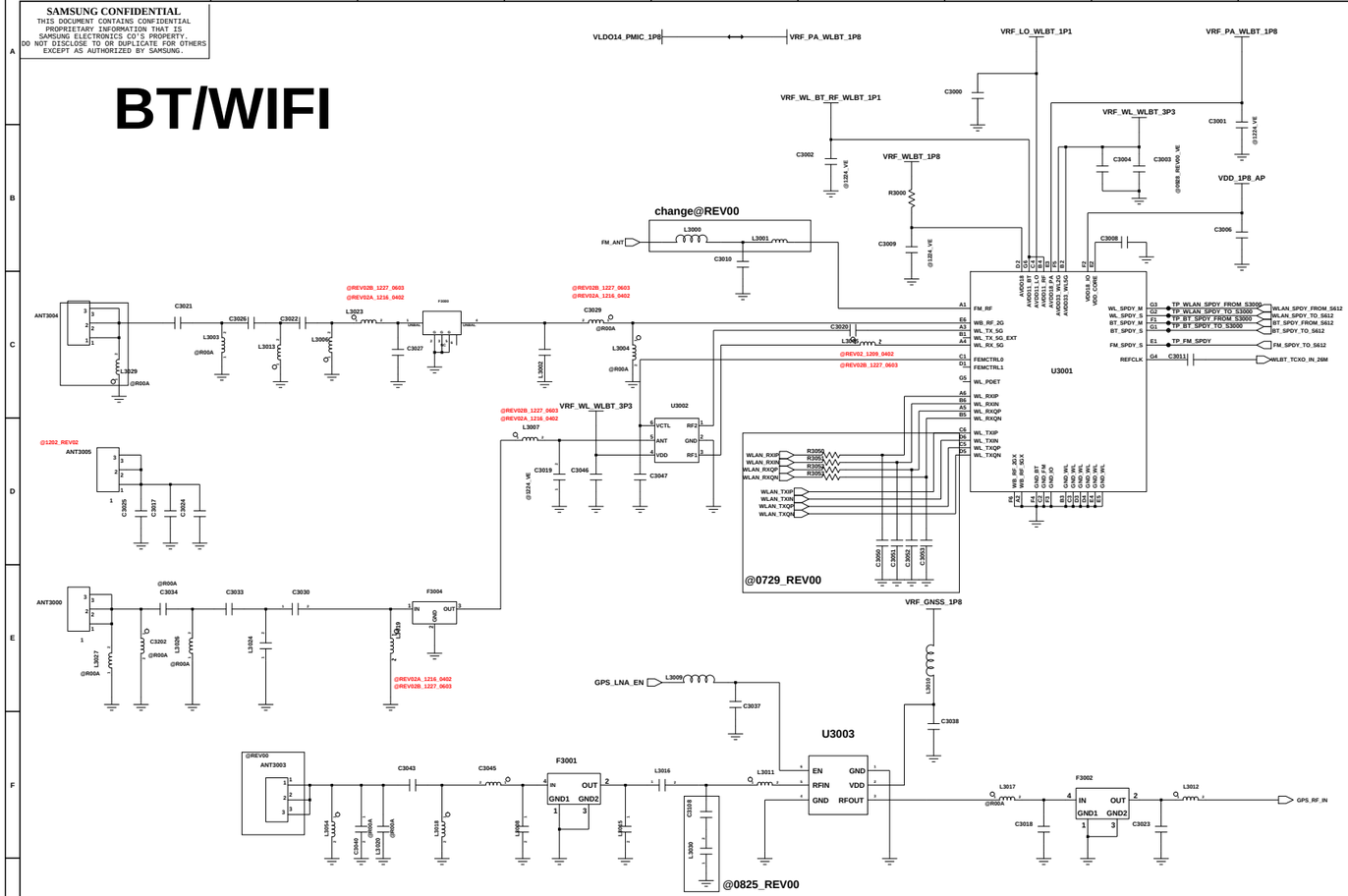

NFC(Option)

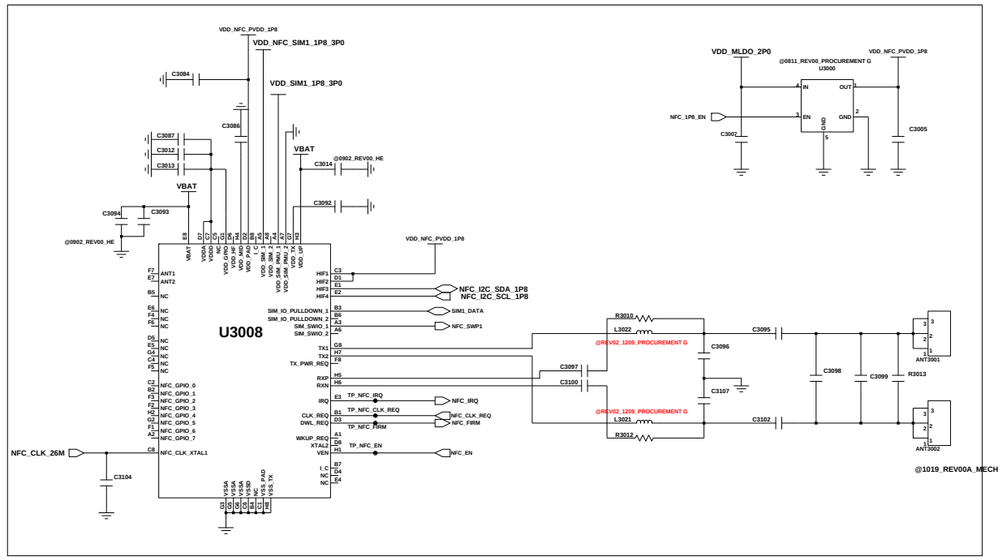

NFC	NFC PART	Power supply of SIM1		NFC GPIO 14	
	U3008	R5017	R5018	R4005	R4006
NFC	CONNECT	short	open	10K ohm	open
nonNFC	NC	open	short	open	10K ohm

SENSORS

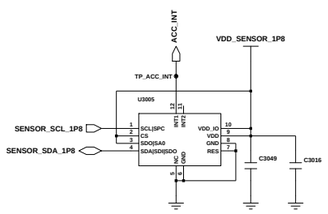

ACC only

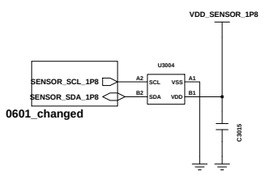

MAGNETIC SENSOR

GUARD CAP FOR MAGNETIC SENSOR

C3200 C3201

LIGHT SENSOR

@0928_REV00_DELETED

BAROMETER SENSOR

@0930_REV00_DELETED

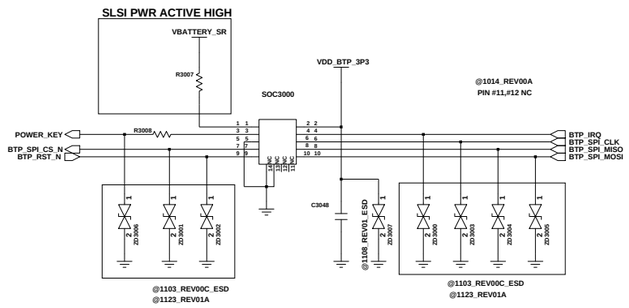

FINGER PRINT SENSOR

Engineer:	
Drawn by:	
R&D CHK:	TITLE:
DOC CTRL CHK:	Size:
MFG ENGR CHK:	
QA CHK:	REV: Drawing Number: Page: 97

Changed by: user93 | Date Changed: | Time Changed:

SAMSUNG CONFIDENTIAL
THIS DOCUMENT CONTAINS CONFIDENTIAL
AND PROPRIETARY INFORMATION OF
SAMSUNG ELECTRONICS CO'S PROPERTY.
DO NOT DISCLOSE TO OR DUPLICATE FOR OTHERS
EXCEPT AS AUTHORIZED BY SAMSUNG.

EXYNOS3830

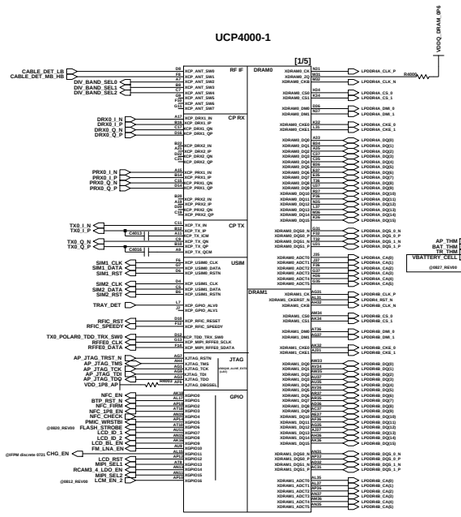

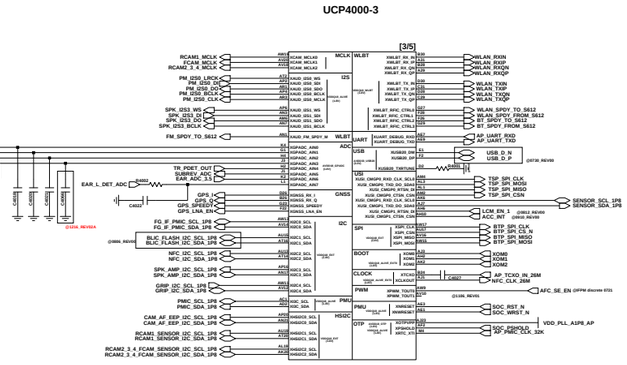

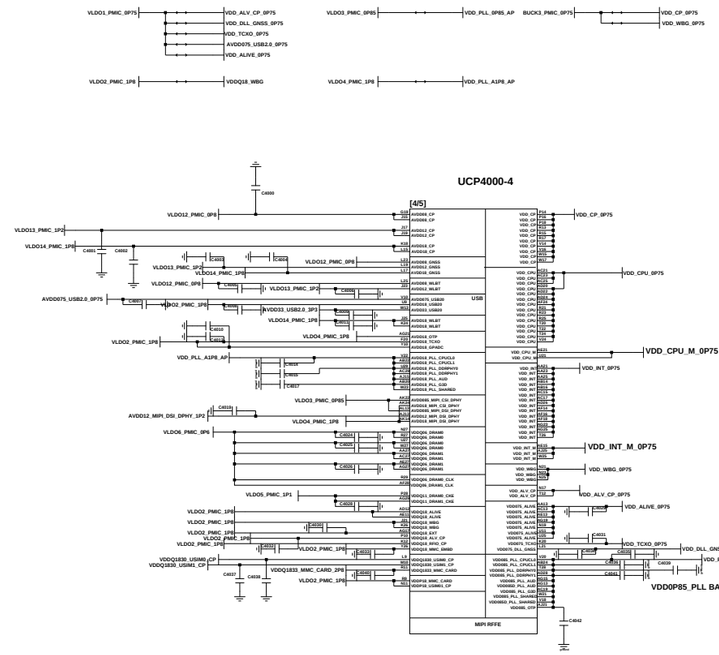

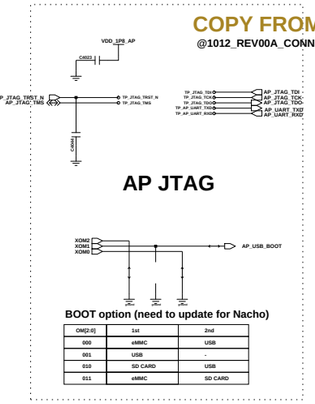

OM[2:0]	1st	2nd
000	eMMC	USB
001	USB	-
010	SD CARD	USB
011	eMMC	SD CARD

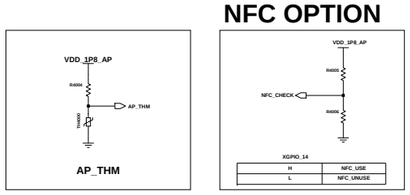

H	NFC_USE
L	NFC_UNUSE

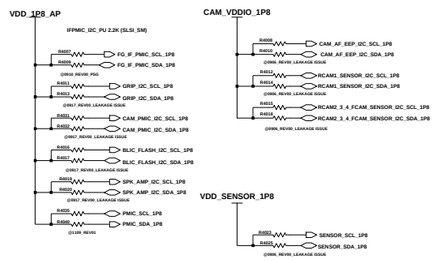

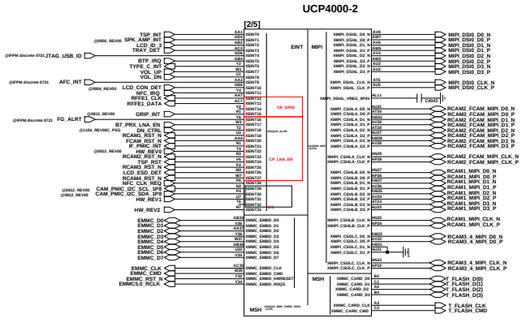

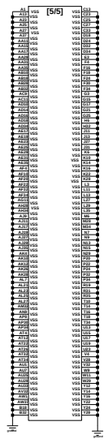

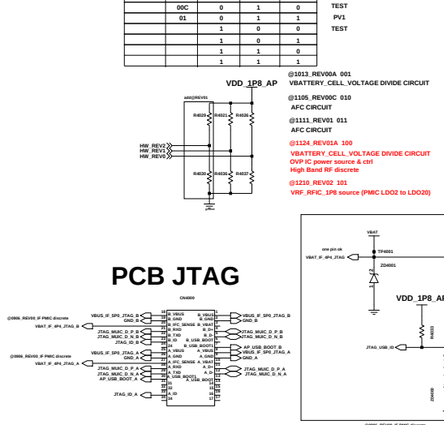

MODEL	REV	HW_VER2	HW_VER1	HW_VER0	
SM-A135F	00	0	0	0	BRING UP
	00A	0	0	1	PRE-PV
	00C	0	1	0	TEST
	01	0	1	1	PV1
		1	0	0	TEST
		1	0	1	
		1	1	0	
		1	1	1	

@1013_REV00A 001
VBATTERY_CELL_VOLTAGE DIVIDE CIRCUIT
@1105_REV00C 010
AFC CIRCUIT
@1111_REV01 011
AFC CIRCUIT
@1124_REV01A 100
VBATTERY_CELL_VOLTAGE DIVIDE CIRCUIT
OVP IC power source & ctrl
High Band RF discrete
@1210_REV02 101
VRF_RFIC_1P8 source (PMIC LDO2 to LDO20)

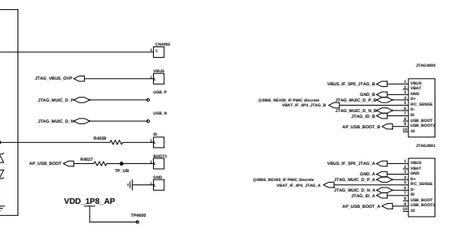

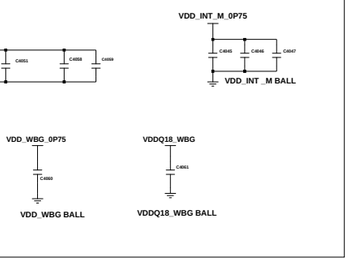

Changed by:	Date Changed:	Time Changed:	Q4 CHK:	REV:	Drawing Number:	Page 47

SAMSUNG CONFIDENTIAL
THIS DOCUMENT CONTAINS CONFIDENTIAL
AND PROPRIETARY INFORMATION OF
SAMSUNG ELECTRONICS CO'S PROPERTY.
DO NOT DISCLOSE TO OR DUPLICATE FOR OTHERS
EXCEPT AS AUTHORIZED BY SAMSUNG.

MAIN_PMIC

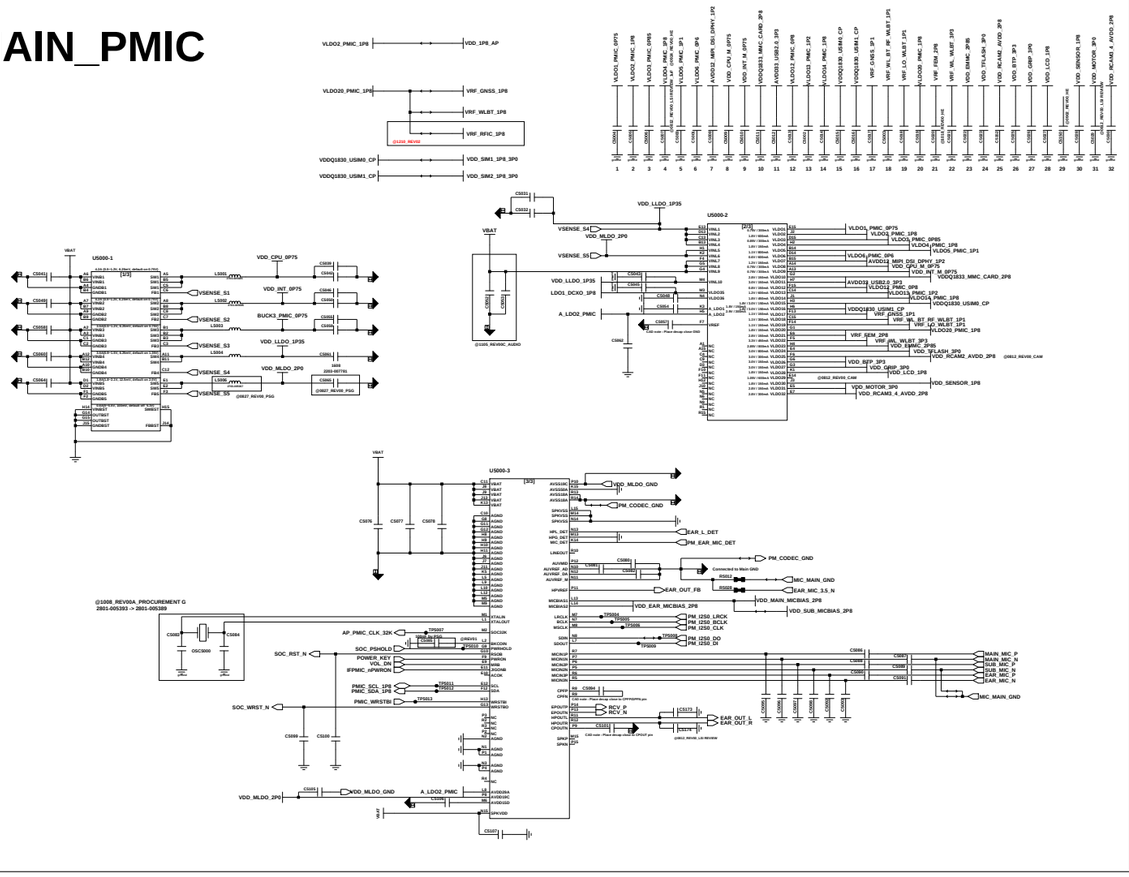

IF_PMIC = Charger SY6970C + F/G MAX17260 + PDIC ET7303

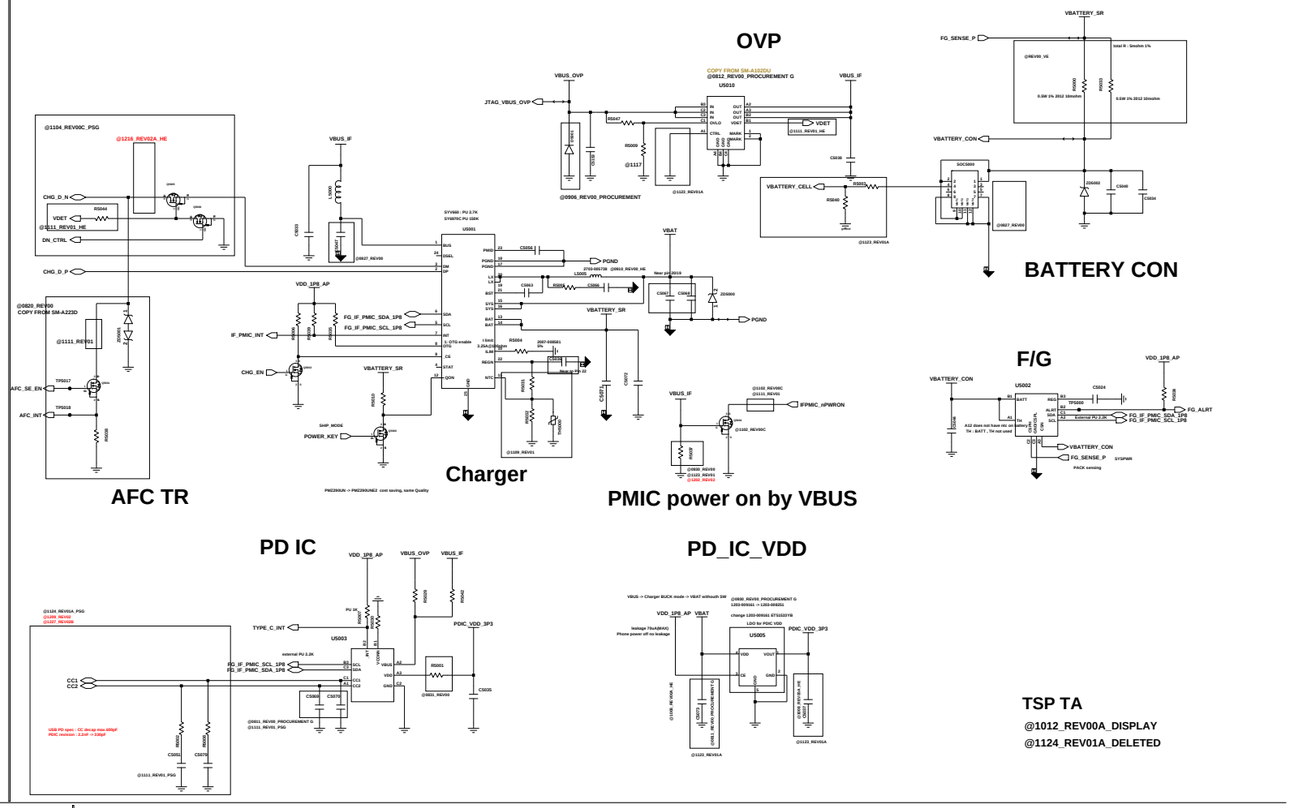

SIM & SD CARD (3IN3)

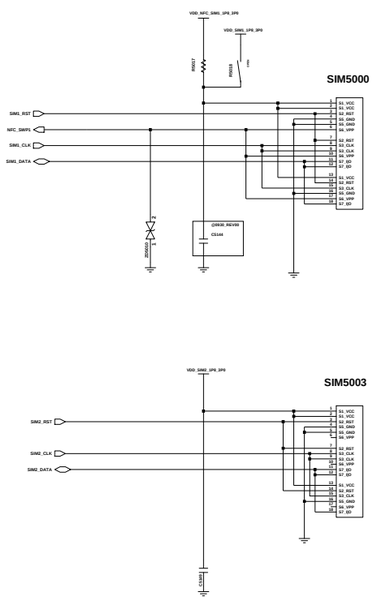

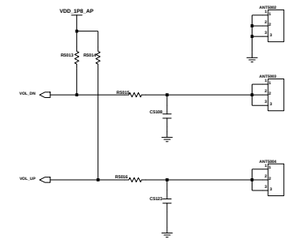

VOLUME KEY

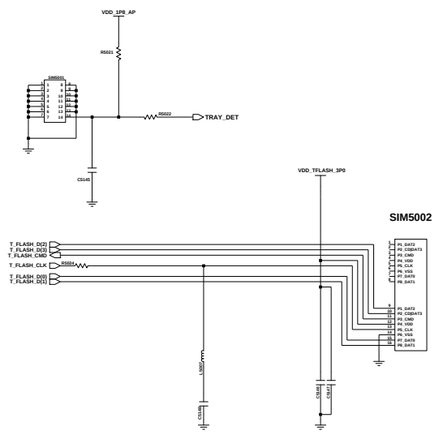

eMCP

* Default eMCP 3G LPDDR4X & 32GB eMMC 5.1 : 1108 - 000678 (KMDX60018M-B425)
eMCP 4G LPDDR4X & 64GB eMMC 5.1 : 1108 - 000725 (KMDP6001DB-B425TY0)
eMCP 4G LPDDR4X & 128GB eMMC 5.1 : 1108 - 000717 (KMDV6001DB-B625)
eMCP 6G LPDDR4X & 128GB eMMC 5.1 : 1108 - 000716 (KM3V6001CB-B708)

@1102_REV00C

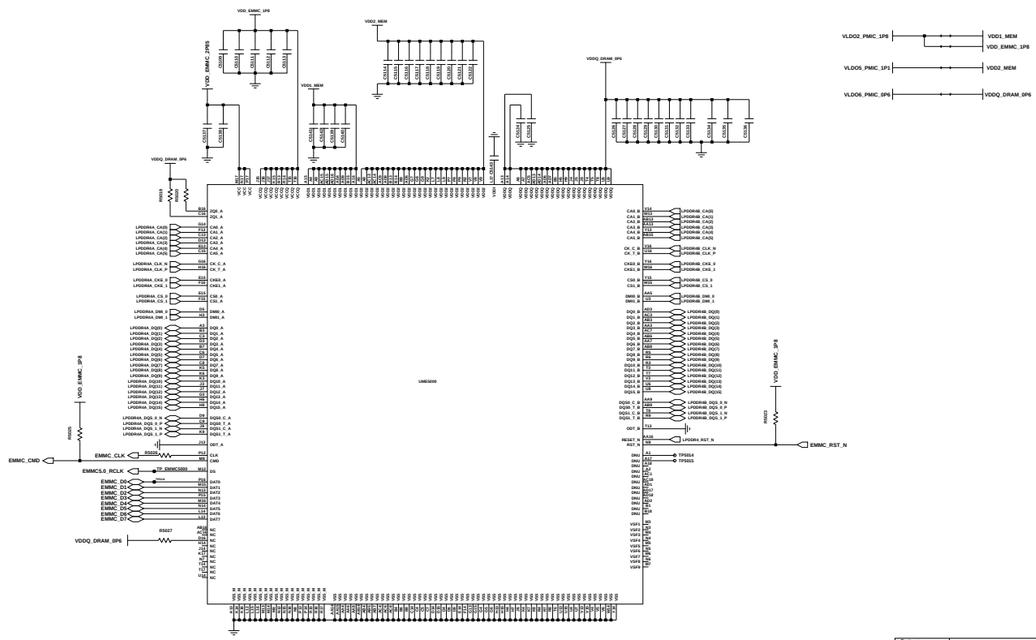

Engineer:											
Drawn by:											
R&D CHK:					TITLE:					Size:	
DOC CTRL CHK:											
MFG ENGR CHK:											
Changed by:	Date Changed:	Time Changed:	Q4 CHK:		REV:	Drawing Number:				Page:1p1	

SAMSUNG CONFIDENTIAL
THIS DOCUMENT CONTAINS CONFIDENTIAL
PROPRIETARY INFORMATION THAT IS
SAMSUNG ELECTRONICS CO'S PROPERTY.
DO NOT DISCLOSE TO OR DUPLICATE FOR OTHERS
EXCEPT AS AUTHORIZED BY SAMSUNG.

BLIC

@0812_REV00_PROCUREMENT G

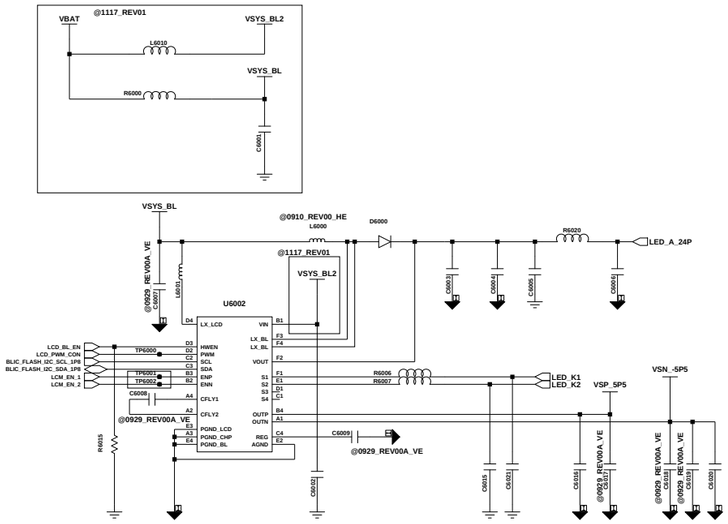

MAIN FPCB_PART (78pin) 6.5" HD+ TFT V-CUT

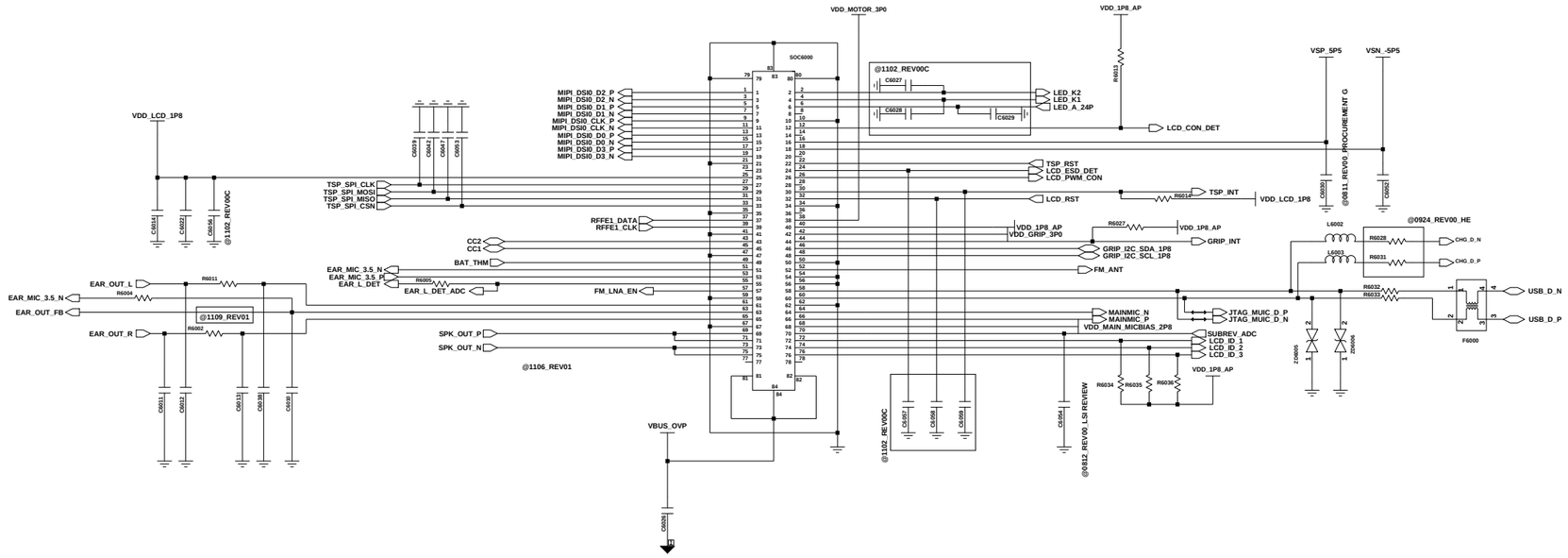

AUDIO_PART

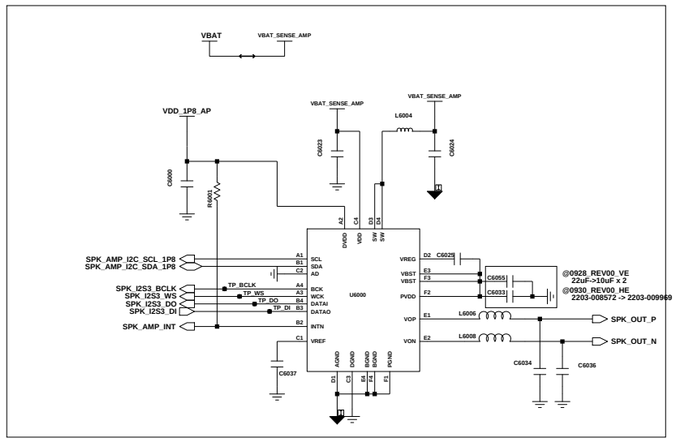

SPK AMP

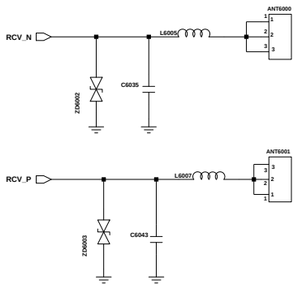

RCV CONTACT

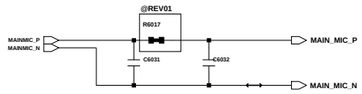

MAIN MIC

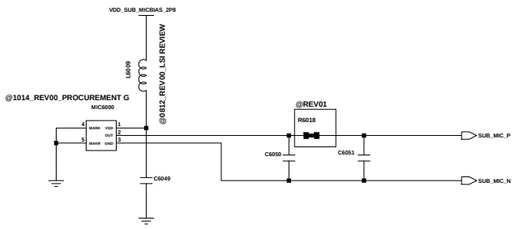

Sub MIC

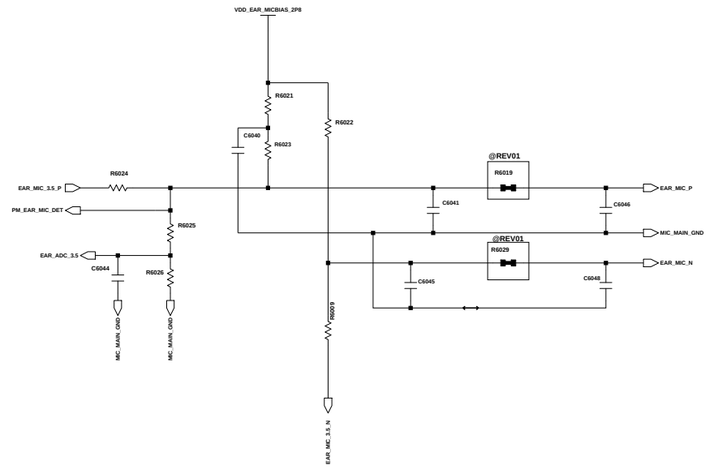

Ear MIC

Engineer:			
Drawn by:			
R&D CHK:	TITLE:		Size:
DOC CTRL CHK:			
MFG ENGR CHK:			
QA CHK:	REV	Drawing Number:	Page:6/7

Changed by:	Date Changed:	Time Changed:

SAMSUNG CONFIDENTIAL
THIS DOCUMENT CONTAINS CONFIDENTIAL PROPRIETARY INFORMATION THAT IS SAMSUNG ELECTRONICS CO'S PROPERTY. DO NOT DISCLOSE TO OR DUPLICATE FOR OTHERS EXCEPT AS AUTHORIZED BY SAMSUNG.

CAMERA

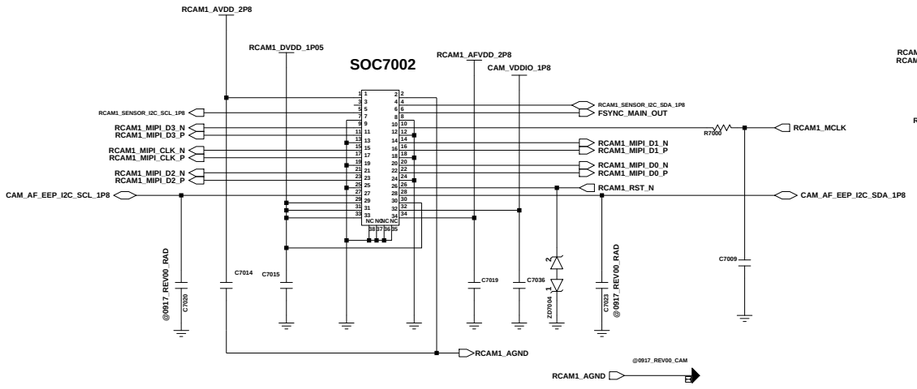

RCAM1_50M(34PIN)_S5KJN1

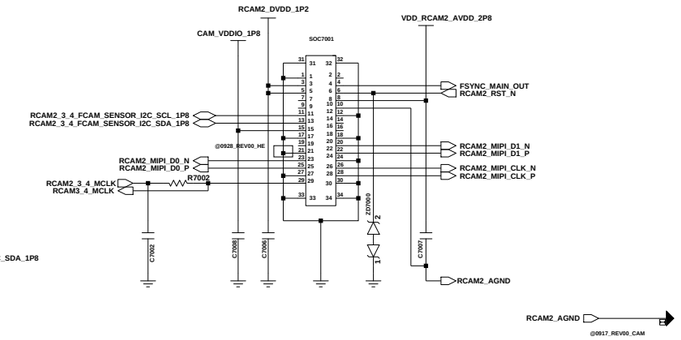

RCAM2_5M_UW (30pin)_GC5035

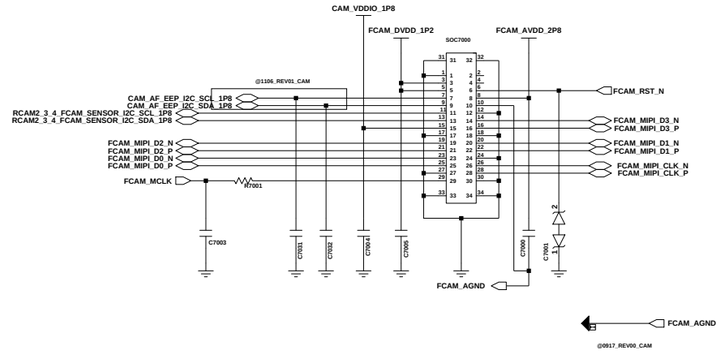

FRONT_8M FF (30PIN)_GC08A3

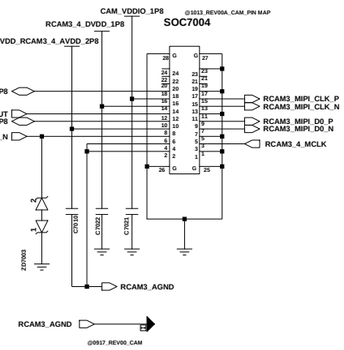

RCAM3_2M_BOKEH (24PIN)_GC02M1B

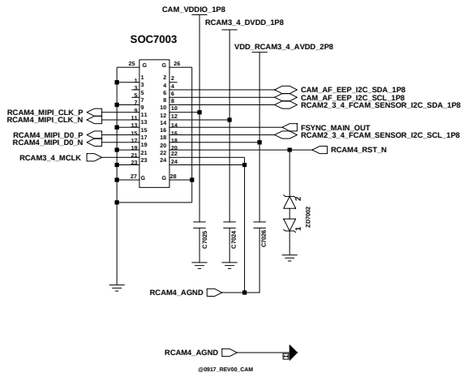

RCAM4_2M_MACRO (24PIN)_GC02M1

CAMERA MIPI SWITCH

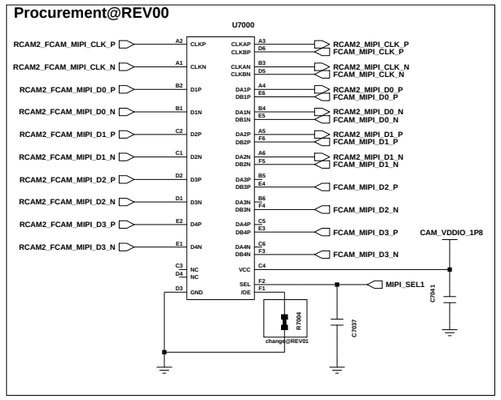

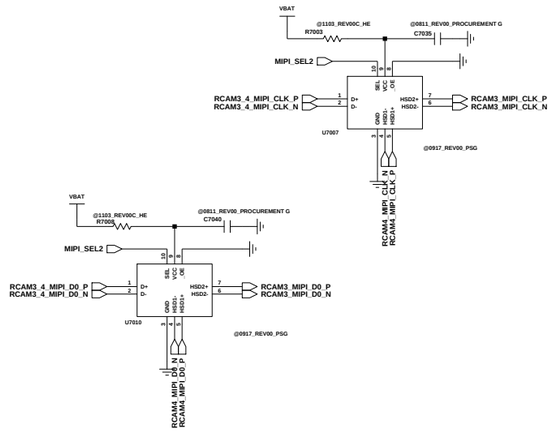

CAM PMIC

0812_REV00

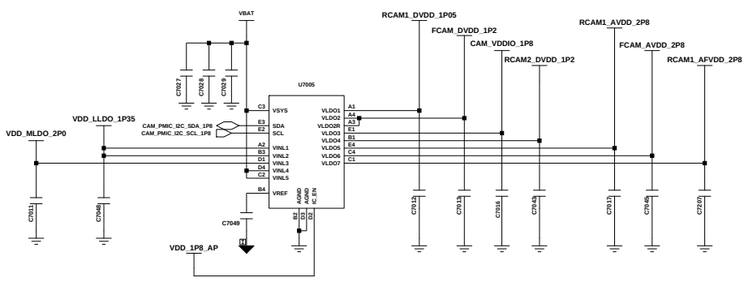

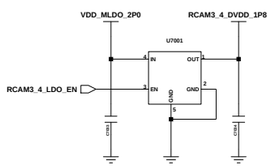

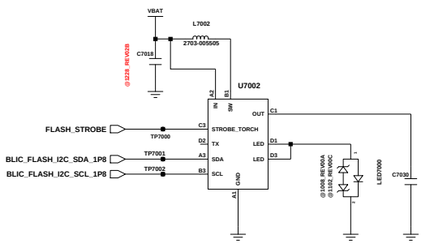

FLASH DRIVER

SHIELD CAN

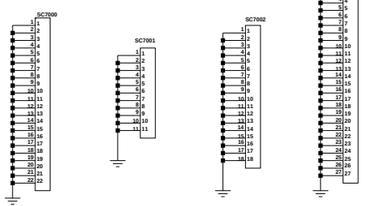

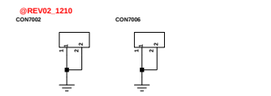

LCD SUS Contact, 3.3t

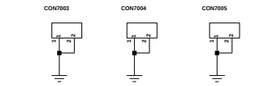

FRONT Contact, 2.2t

BOSS HOLE

BOTH7001
PBA SCREW HOLE

BOTH7000
CENTER LOWER

2D BARCODE

REGION

GLOBAL (A)	R7020
GLOBAL (B)	R7021
LA (C)	R7022
KOR (N)	R7023

MEMORY

3+32	R7030
4+64	R7031
4+128	R7032
6+128	R7033

Engineer:	
Drawn by:	
R&D CHK:	
DOC CTRL CHK:	
MFG ENGR CHK:	
QA CHK:	
TITLE:	SM-A426B
	CAMERA
Size:	
Changed by:	
Date Changed:	
Time Changed:	
REV	
Drawing Number:	
Page:	7/8

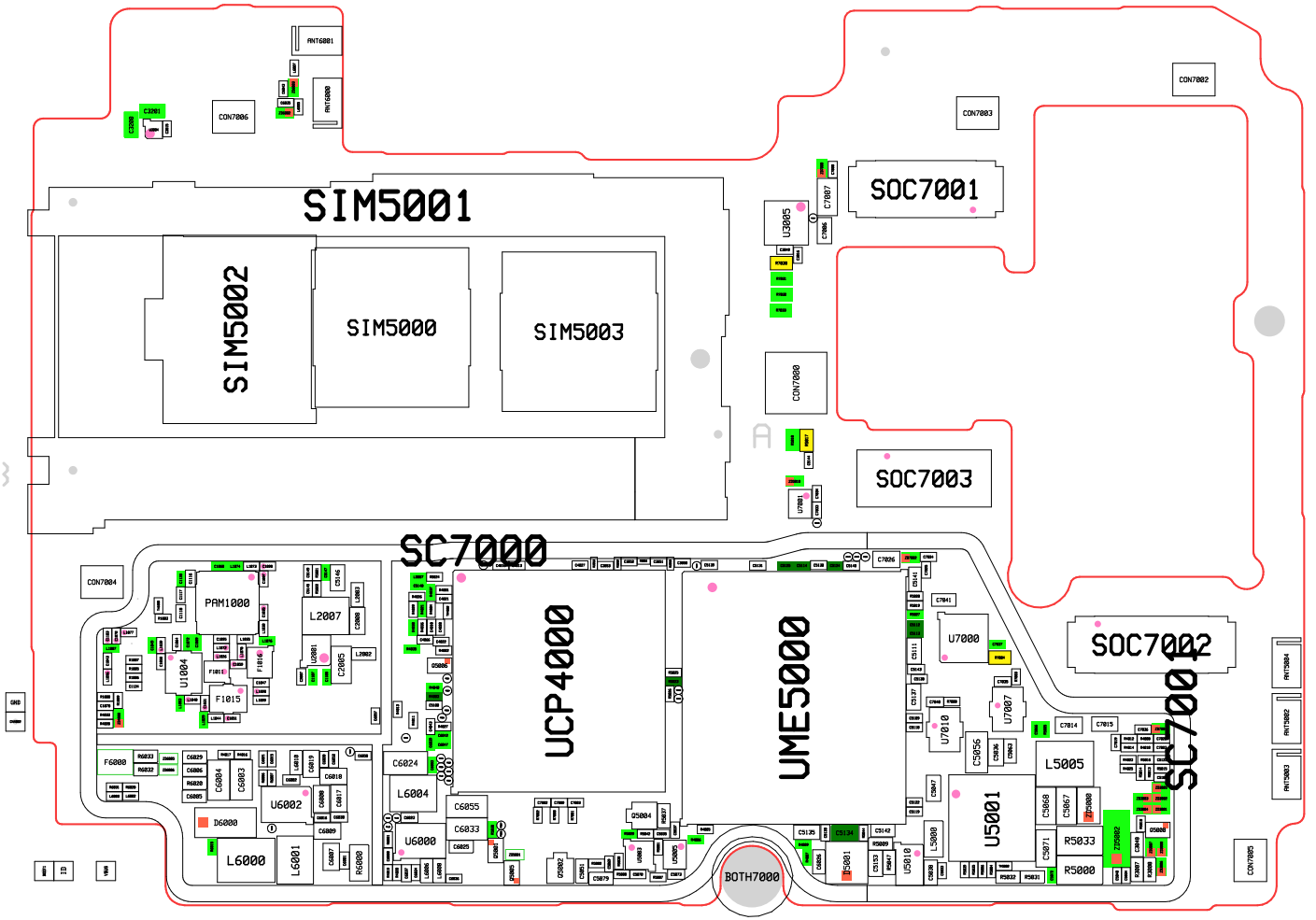
SIM5001
SIM5002
SIM5000
SIM5003
SOC7001
SOC7003
SOC7002
SC7000
UCP4000
UME5000
SC7001
PAM1000
L2007
U1004
F1015
U6002
L6000
L6001
U6000
L6004
U7000
U7010
U7007
U5001
L5005
R5033
R5000
U5010
BOTH7000
CON7000
CON7002
CON7003
CON7004
CON7005
CON7006
ANT6001
ANT6000
ANT5004
ANT5002
ANT5003
JTAG4000
JTAG4001
CN4000

SM-A135M

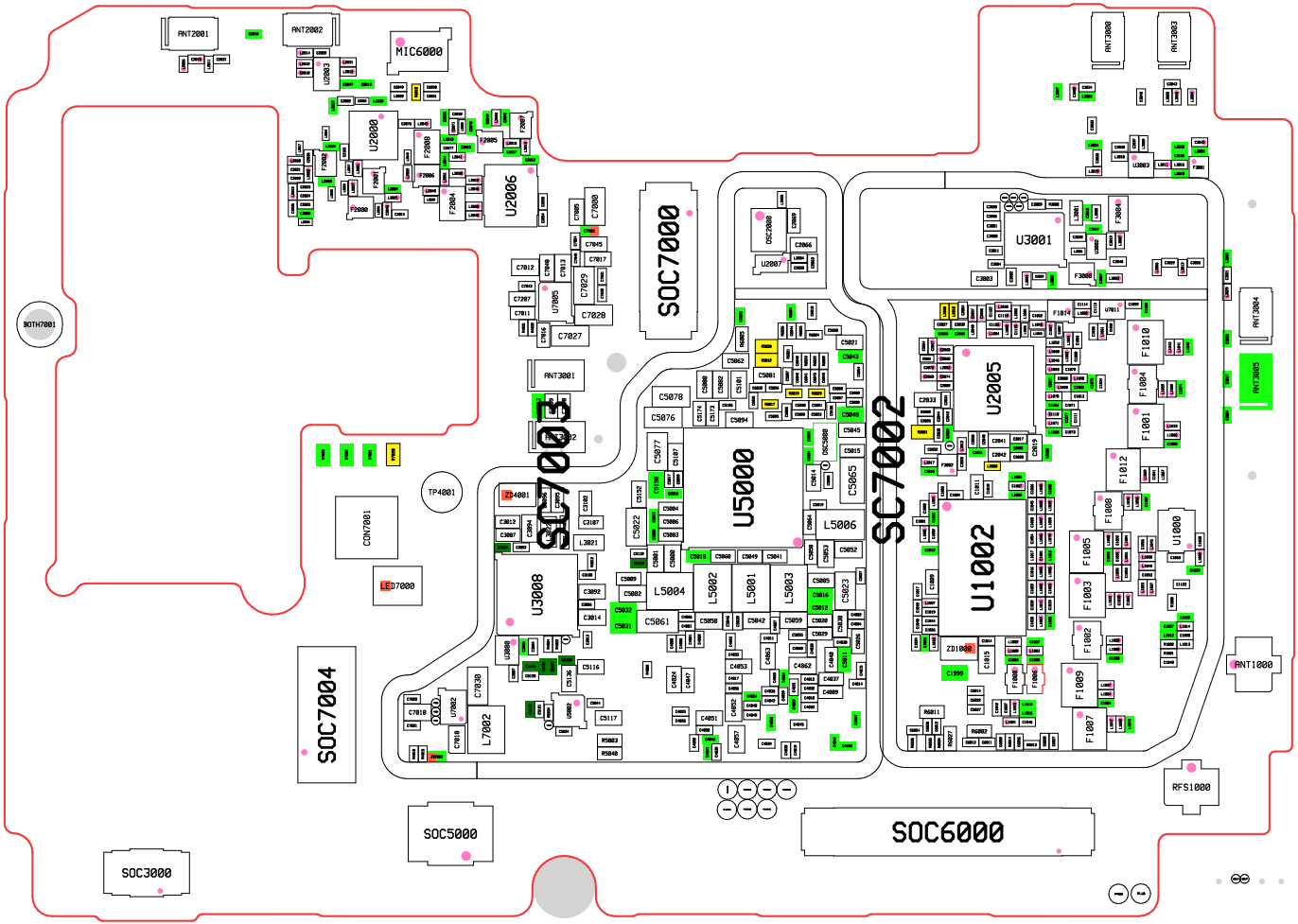
ANT2001
ANT2002
MIC6000
U2003
U2000
U2006
F2000
F2001
F2002
F2003
F2004
F2005
F2006
F2007
F2008
C7000
C7005
C7045
C7017
C7012
C7008
C7013
C7007
C7029
C7287
C7011
U7005
C7028
C7016
C7027
ANT3001
SOC7000
SOC7003
SC7003
SC7002
U5000
C5078
C5076
C5077
C5107
C5102
C5101
C5022
C5084
C5086
C5083
C5080
C5081
C5088
C5087
C5089
C5082
C5032
C5031
C5061
C5050
C5058
C5042
C5059
C5060
C5029
C5028
C5027
C4848
C4849
C4850
C4851
C4852
C4853
C4854
C4855
C4856
C4857
C4858
C4859
C4860
C4861
C4862
C4863
C4864
C4865
C4866
C4867
C4868
C4869
C4870
C4871
C4872
C4873
C4874
C4875
C4876
C4877
C4878
C4879
C4880
C4881
C4882
C4883
C4884
C4885
C4886
C4887